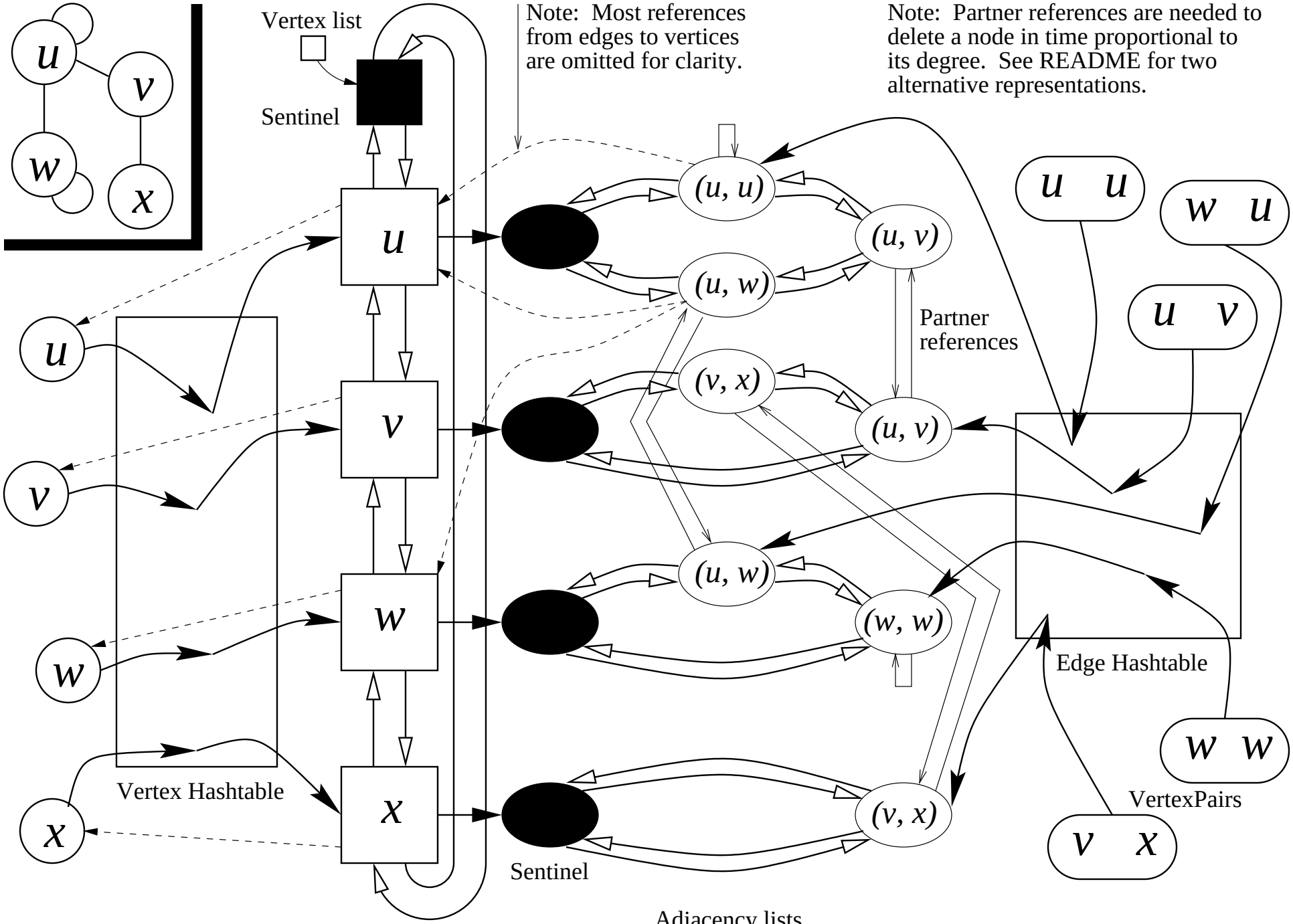

Sample WUGraph (weighted undirected graph) representation. You are not required to implement it *exactly* as illustrated here. This is just a suggestion.